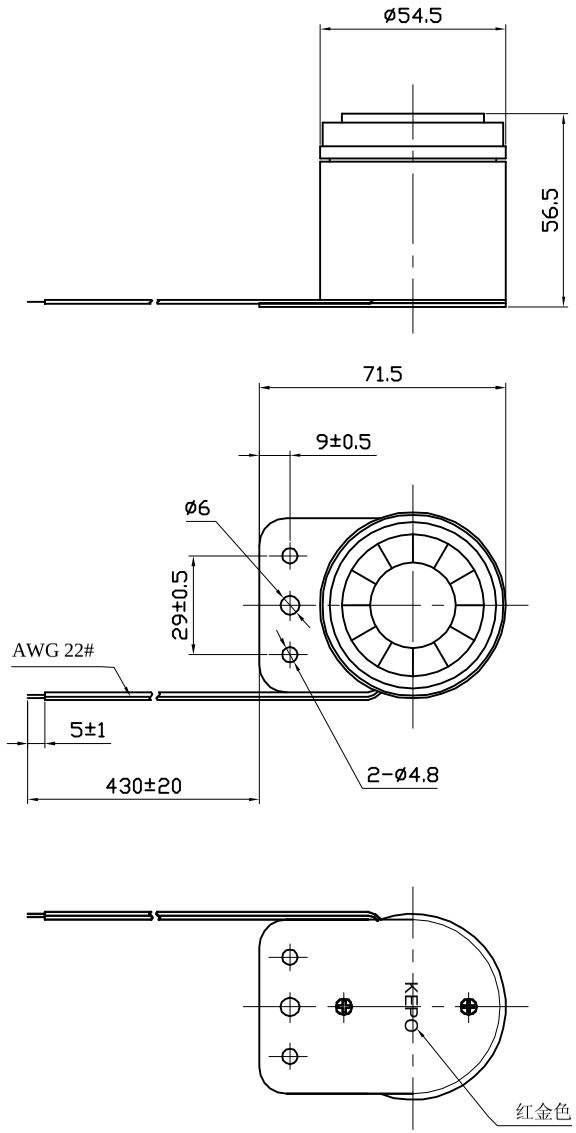

SPECIFICATION

1.Rated Voltage 12VDC
2.Operating Voltage .....6~15VDC
3.Max.Rated Current .....≤300mA/12VDC
4.Resonant Frequency .....1.5～4K
5.Min.Sound Pressure Level.....105dB/100cm/12VDC
6.Tone Nature .....Siren
7.Case Material .....ABS
8.Operating Temperature .....-20～+60℃
9.Store Temperature .....-30～+70℃
10.Wires Connection .....Red +12V
.....Black GND
11.Weight 110g

No.	DESCRIPTION	APPROVED	DATE

TOLERANCES UNLESS NOTED OTHERWISE
.X ±
.XX ±
.XXX ±
90° FORMED +2 °
ANGLES -1 °
FIRST ANGLE PROJECTION

APPROVALS	DATE
DRAWN	
CHECKED	
APPROVED	06.11.17

Compliance with ROHS

KEPO NINGBO KEPO ELECTRONIC CO.,LTD
http://www.chinaacoustic.com

Electronic siren
KPS-G1500(With KEPO)

UNIT	DWG NO.		
mm	KP3.840.430.03R		
SCALE	SHEET	VER	
NOT TO SCALE		1.0	